DUAL ENTRY BATTERY TERMINAL INSULATORS

PACK OF 5

- For flag or right angle terminals
- Meets & exceeds industry standards
- Designed to protect ring, lug & battery terminals
- Prevents accidental short circuiting at the terminals or studs
- PVC material
- Temperature rating 105°C
- Pack of 5

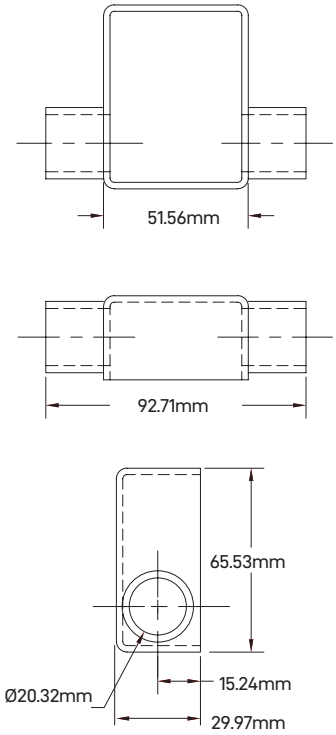

PRODUCT INFORMATION

Part No.	Description	Colour	Cable Size
LV2479	Insulator - battery terminal	Black	Up to 0000 B&S
LV2479R	Insulator - battery terminal	Red	Up to 0000 B&S